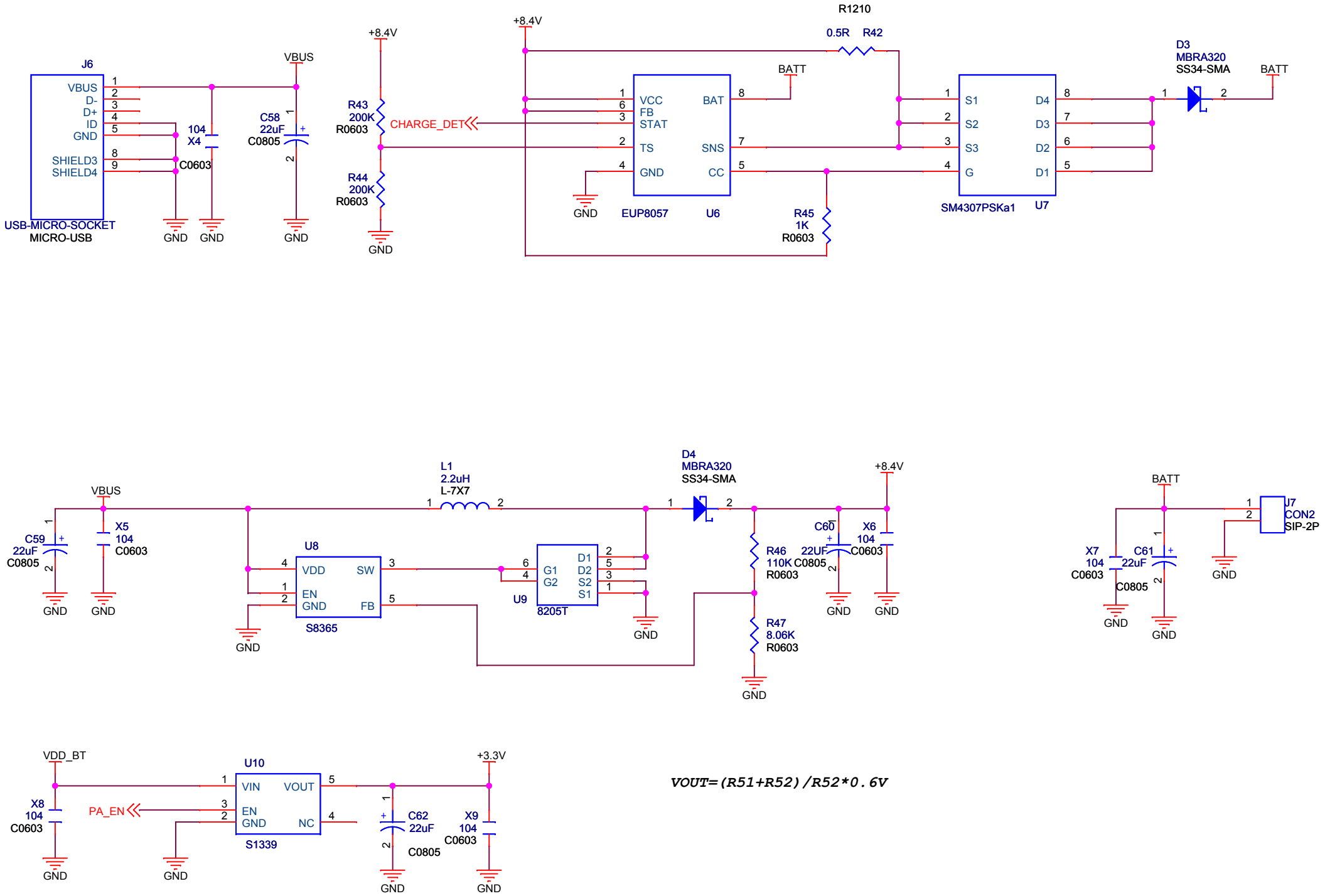
J6
VBUS
D-
D+
ID
GND
SHIELD3
SHIELD4
USB-MICRO-SOCKET
MICRO-USB
104
X4
C0603
C58
22uF
C0805
VBUS
GND
+8.4V
R43
200K
R0603
R44
200K
R0603
CHARGE_DET
R1210
0.5R
R42
BATT
VCC
FB
STAT
TS
GND
BAT
SNS
CC
EUP8057
U6
R45
1K
R0603
S1
S2
S3
G
D4
D3
D2
D1
SM4307PSKa1
U7
D3
MBRA320
SS34-SMA
L1
2.2uH
L-7X7
D4
MBRA320
SS34-SMA
C59
22uF
C0805
X5
104
C0603
U8
VDD
EN
GND
SW
FB
S8365
U9
G1
G2
D1
D2
S2
S1
8205T
R46
110K
R0603
C60
22UF
C0805
X6
104
C0603
R47
8.06K
R0603
U7
CON2
SIP-2P
X7
104
C0603
C61
22uF
C0805
VDD_BT
X8
104
C0603
PA_EN
U10
VIN
EN
GND
VOUT
NC
S1339
C62
22uF
C0805
X9
104
C0603
+3.3V
VOUT=(R51+R52)/R52*0.6V

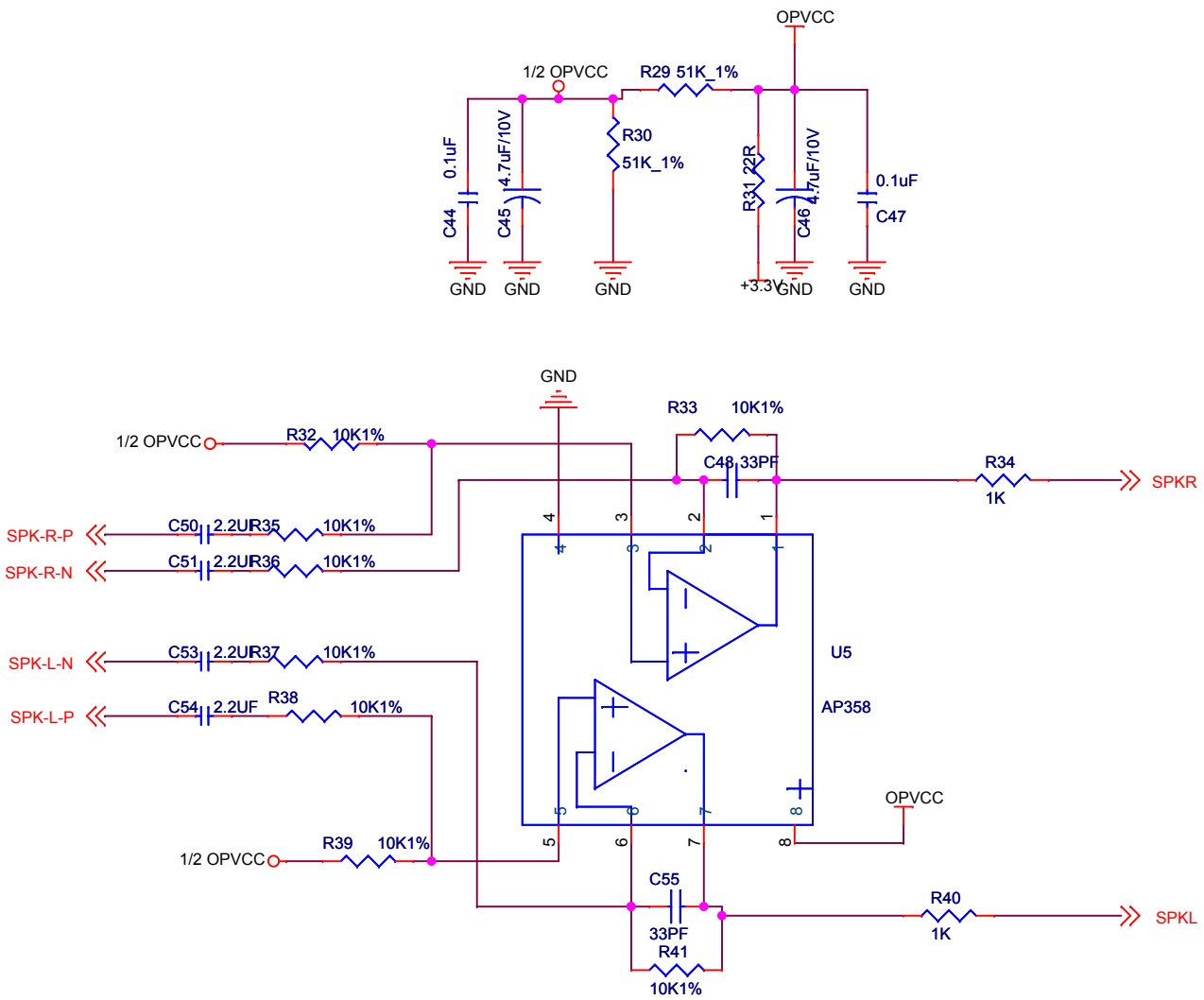
OPVCC
1/2 OPVCC
R29 51K_1%
R30
51K_1%
R31 22R
C44
0.1uF
C45
4.7uF/10V
C46
4.7uF/10V
C47
0.1uF
GND
GND
GND
+3.3V
GND
GND
GND
R33 10K1%
1/2 OPVCC
R32 10K1%
C48 33PF
R34
1K
SPKR
SPK-R-P
C50 2.2UF
R35 10K1%
SPK-R-N
C51 2.2UF
R36 10K1%
SPK-L-N
C53 2.2UF
R37 10K1%
SPK-L-P
C54 2.2UF
R38 10K1%
U5
AP358
OPVCC
1/2 OPVCC
R39 10K1%
C55
33PF
R41
10K1%
R40
1K
SPKL

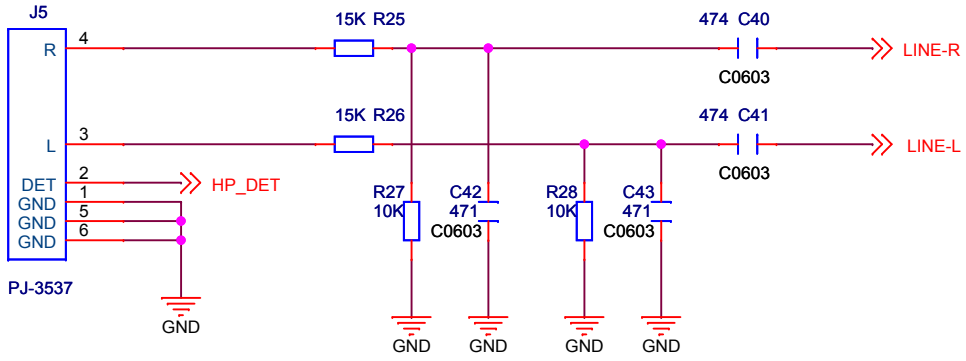
J5
R
L
DET
GND
GND
GND
4
3
2
1
5
6
PJ-3537
HP_DET
GND
15K R25
15K R26
R27
10K
C42
471
C0603
R28
10K
C43
471
C0603
474 C40
C0603
474 C41
C0603
LINE-R
LINE-L
GND
GND
GND
GND

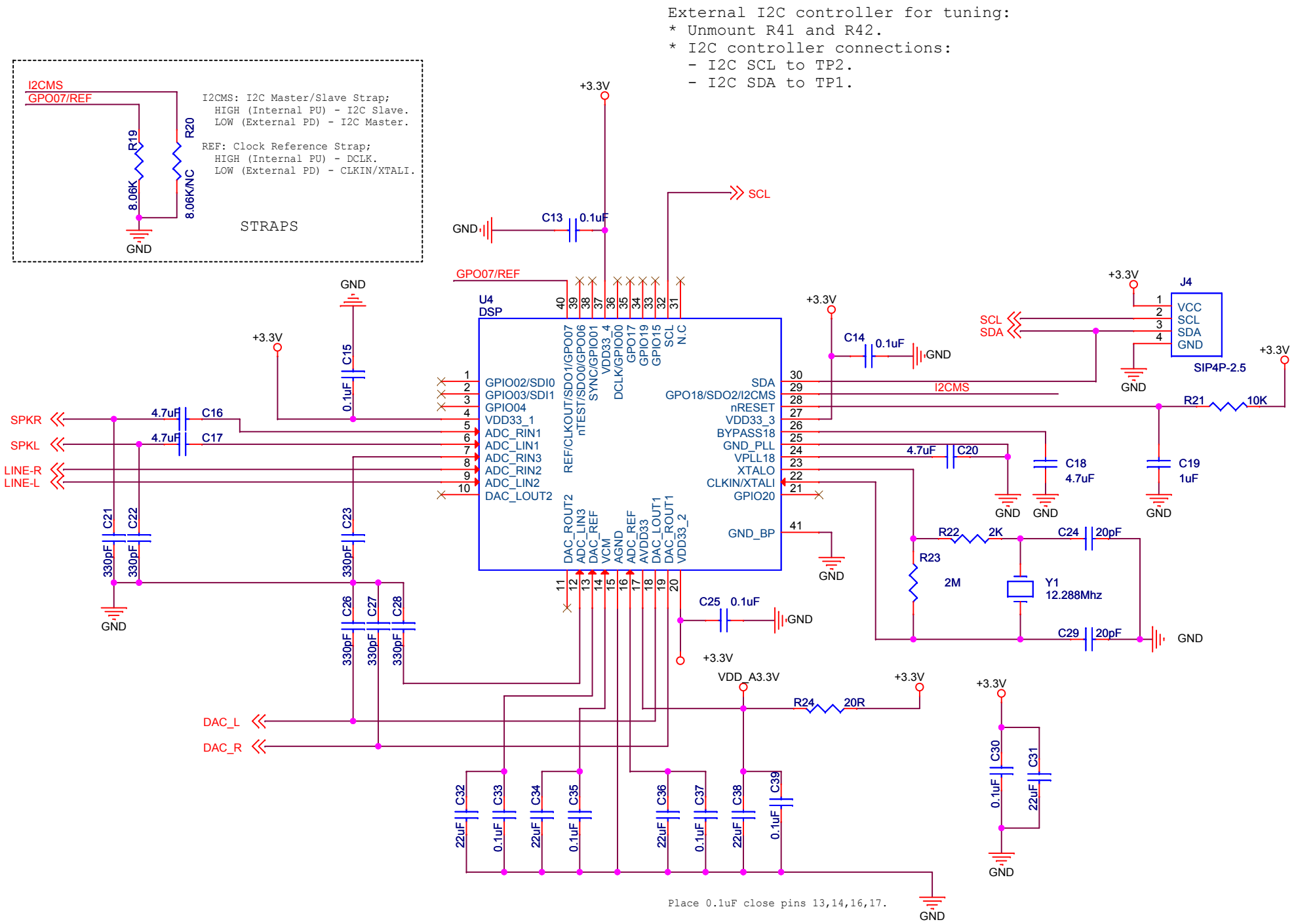
External I2C controller for tuning:
* Unmount R41 and R42.
* I2C controller connections:
- I2C SCL to TP2.
- I2C SDA to TP1.
I2CMS
GPO07/REF
R19
8.06K
R20
8.06K/NC
GND
I2CMS: I2C Master/Slave Strap;
HIGH (Internal PU) - I2C Slave.
LOW (External PD) - I2C Master.
REF: Clock Reference Strap;
HIGH (Internal PU) - DCLK.
LOW (External PD) - CLKIN/XTALI.
STRAPS
+3.3V
C13
0.1uF
SCL
U4
DSP
GPO07/REF
GPIO02/SDI0
GPIO03/SDI1
GPIO04
VDD33_1
ADC_RIN1
ADC_LIN1
ADC_RIN3
ADC_RIN2
ADC_LIN2
DAC_LOUT2
REF/CLKOUT/SDO1/GPO07
nTEST/SDO0/GPO06
SYNC/GPIO01
VDD33_4
DCLK/GPIO00
GPO17
GPIO19
GPIO15
SCL
N.C
SDA
GPO18/SDO2/I2CMS
nRESET
VDD33_3
BYPASS18
GND_PLL
VPLL18
XTALO
CLKIN/XTALI
GPIO20
GND_BP
DAC_ROUT2
ADC_LIN3
DAC_REF
VCM
AGND
ADC_REF
AVDD33
DAC_LOUT1
DAC_ROUT1
VDD33_2
SPKR
SPKL
LINE-R
LINE-L
4.7uF
C16
C17
C15
0.1uF
C21
C22
C23
330pF
C26
C27
C28
C14
C20
C18
4.7uF
C19
1uF
J4
VCC
SCL
SDA
GND
SIP4P-2.5
R21
10K
R22
2K
C24
20pF
R23
2M
Y1
12.288Mhz
C29
C25
DAC_L
DAC_R
VDD_A3.3V
R24
20R
C32
C33
C34
C35
C36
C37
C38
C39
22uF
C30
C31
Place 0.1uF close pins 13,14,16,17.

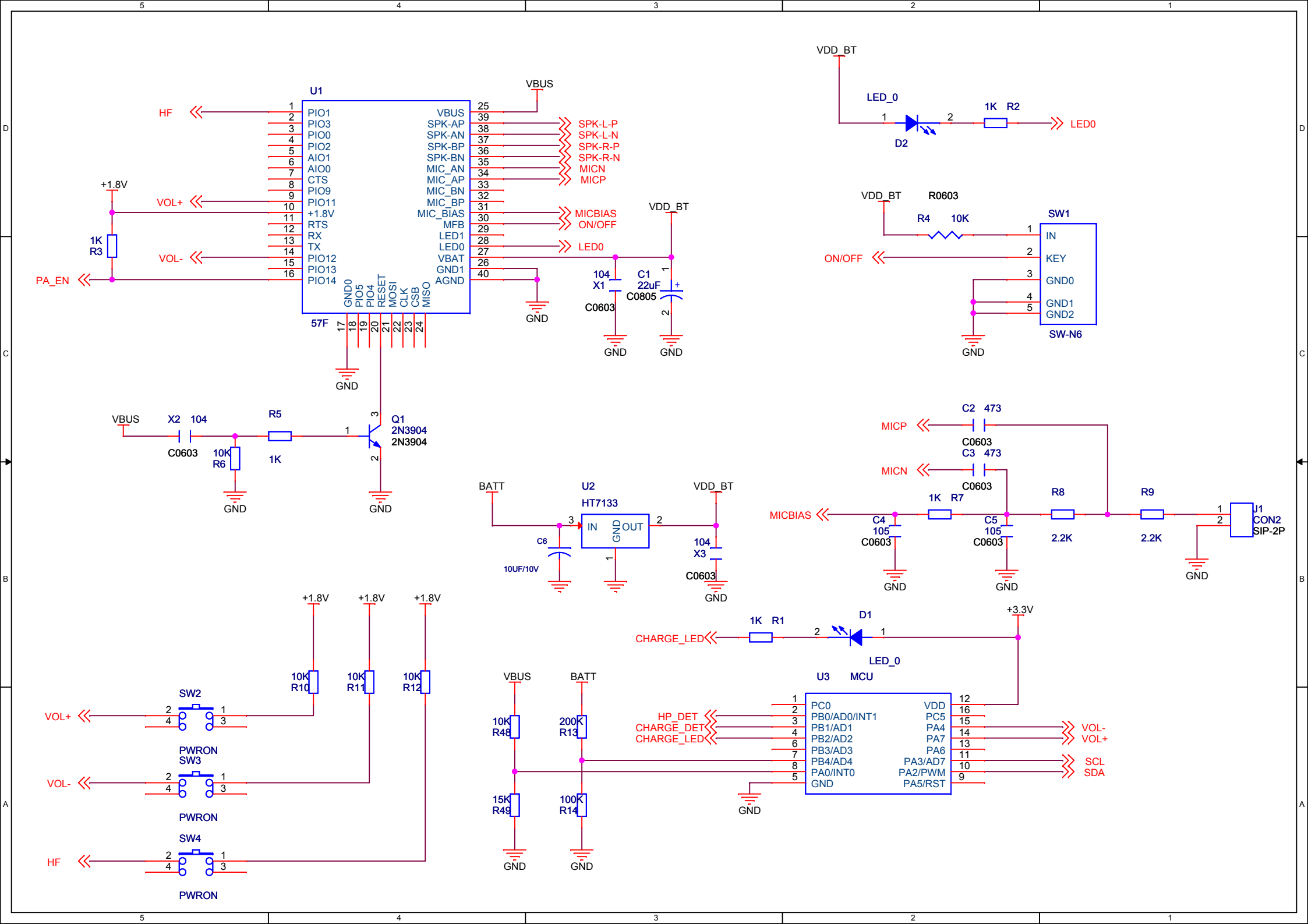
U1
57F
PIO1
PIO3
PIO0
PIO2
AIO1
AIO0
CTS
PIO9
PIO11
+1.8V
RTS
RX
TX
PIO12
PIO13
PIO14
GND0
PIO5
PIO4
RESET
MOSI
CLK
CSB
MISO
VBUS
SPK-AP
SPK-AN
SPK-BP
SPK-BN
MIC_AN
MIC_AP
MIC_BN
MIC_BP
MIC_BIAS
MFB
LED1
LED0
VBAT
GND1
AGND
HF
VOL+
VOL-
PA_EN
SPK-L-P
SPK-L-N
SPK-R-P
SPK-R-N
MICN
MICP
MICBIAS
ON/OFF
LED0
VDD_BT
104
X1
C0603
C1
22uF
C0805
GND
+1.8V
1K
R3
VBUS
X2
104
C0603
10K
R6
R5
1K
Q1
2N3904
2N3904
BATT
U2
HT7133
IN
GND
OUT
C6
10UF/10V
104
X3
C0603
VDD_BT
LED_0
D2
1K
R2
LED0
VDD_BT
R0603
R4
10K
SW1
IN
KEY
GND0
GND1
GND2
SW-N6
ON/OFF
C2
473
C0603
C3
473
C0603
MICP
MICN
MICBIAS
C4
105
C0603
1K
R7
C5
105
C0603
R8
2.2K
R9
2.2K
J1
CON2
SIP-2P
+1.8V
+1.8V
+1.8V
10K
R10
10K
R11
10K
R12
SW2
VOL+
PWRON
SW3
VOL-
PWRON
SW4
HF
PWRON
VBUS
BATT
10K
R48
200K
R13
15K
R49
100K
R14
CHARGE_LED
1K
R1
D1
LED_0
+3.3V
U3
MCU
PC0
PB0/AD0/INT1
PB1/AD1
PB2/AD2
PB3/AD3
PB4/AD4
PA0/INT0
GND
VDD
PC5
PA4
PA7
PA6
PA3/AD7
PA2/PWM
PA5/RST
HP_DET
CHARGE_DET
CHARGE_LED
VOL-
VOL+
SCL
SDA

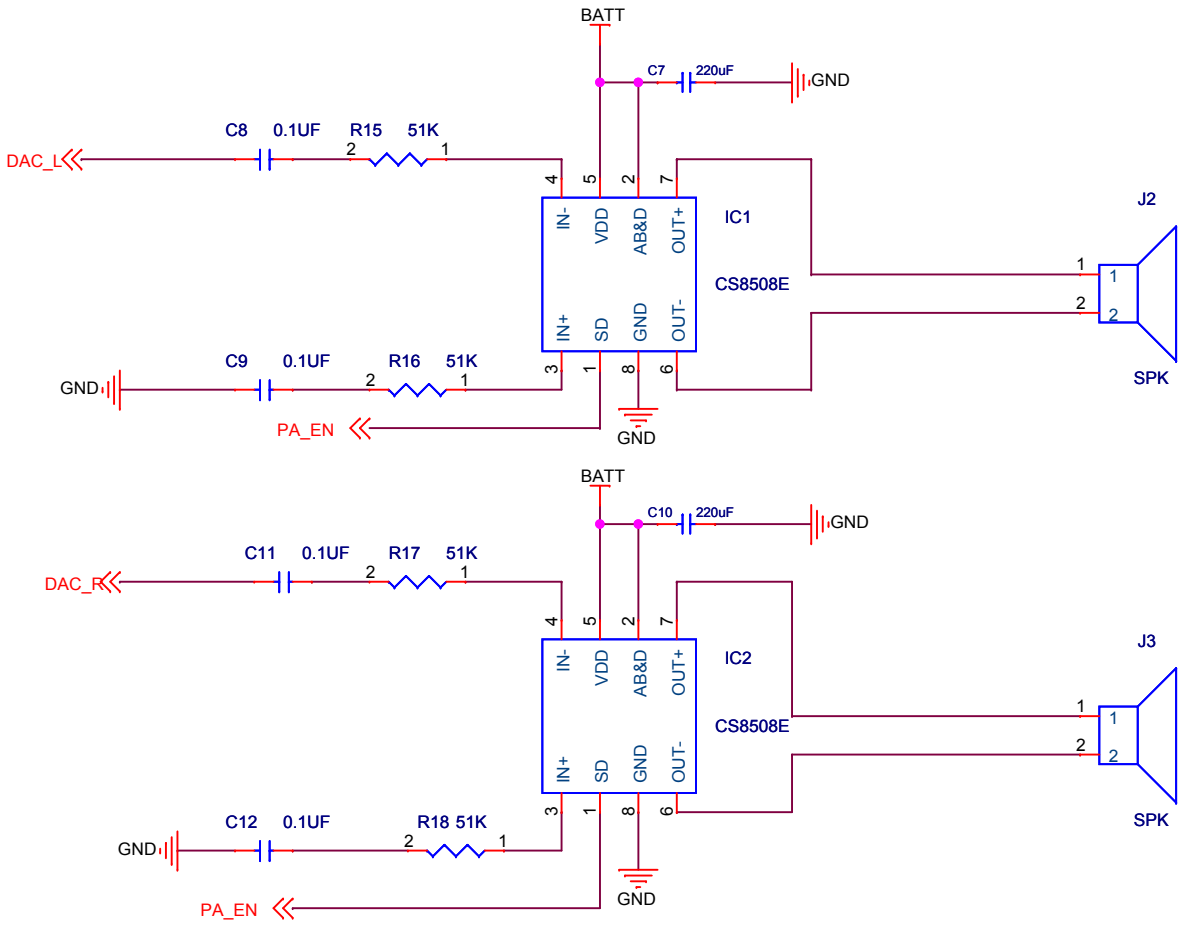

Title	<Title>	
Size A4	Document Number <Doc>	Rev <RevCo
Date: Sunday, August 25, 2013	Sheet 2 of 6	